George Massenburg Labs

GML 2020 High Resolution Discrete Input Channel

The GML 2020 High Resolution Discrete Input Channel sets a new standard in signal processing. Combining the features of the GML flagship 8200 Parametric Equalizer, 8300 Transformerless Microphone Preamplifier, and 8900 Dynamic Gain Control with additional functions, this powerfully pristine single channel unit embodies the legendary detail and accuracy for which GML is renowned.

Owner's Manual
Version 1.2
April, 2002

GML, LLC
P.O. Box 1366
Franklin, TN 37065
615.790.1016 (ph)
615.794.4802 (fax)
gmlinc@ix.netcom.com

INTRODUCTION

The GML 2020 High Resolution Discrete Input Channel sets a new standard in signal processing. It combines the features of the GML flagship 8200 Parametric Equalizer, 8300 Transformerless Microphone Preamplifier, and 8900 Dynamic Gain Control into a powerfully pristine single channel unit. The power and functionality of these revolutionary processors is further coupled with the addition of a front panel musical instrument input, two position high-pass filter, front panel phantom and phase switching, and flexible routing options while maintaining the GML standard of performance and transparency. These advanced circuits, envisioned by George Massenburg, have benefited from over 30 years of research, limited manufacturing, critical listening analysis, widespread usage by demanding industry professionals, and continuous evaluation by the GML Engineering Department.

FEATURES

The GML Model 2020 High Resolution Discrete Input Channel derives its power and flexibility in large part from its features:

- All-discrete, Class-A design; no integrated circuits to compromise the audio path
- DC-servo and premium-grade film coupling; no interstage capacitors to add distortion or degrade over time; no tantalum electrolytic, ceramic, or aluminum electrolytic capacitors in the signal path
- Transformerless; precision electronically balanced inputs
- Designed with GML 9202 low-noise, low-distortion, wide dynamic range, wide bandwidth precision discrete opamps
- DC-servo stabilized direct-coupled output
- Multi-input format: Mic, Line, or M/I (front panel musical instrument)
- Wide gain range (-10 dB to +70 dB) available on all inputs
- Flexible routing: EQ before DYN, EQ to DYN Sidechain, DYN before EQ
- High-pass filter; selectable 40 Hz, flat, 100Hz
- Front panel Phantom and Phase switches
- Link function; allows multiple units to act in concert

- Precise input signal LED meter; 5 color-coded steps
- Interstage (EQ out, DYN out) Clip/OL LED
- Illuminated push-button switches for "EQ In", "Dynamics In" and "Link"
- Carbon-film precision potentiometers, manufactured to GML exacting standards
- GML-specified custom robust rotary switches; precious metal contacts
- Precious-metal interconnects
- High-quality XLR interconnects, Au over Ag
- Proprietary discrete VCA; excellent low-level resolution, low distortion, low noise
- Highly accurate logarithmic Dynamics control: provides consistent processor action across a wide dynamic range for added flexibility and transparency
- Powerful RMS Dynamics detection: enables true musical-energy tracking; acts upon all-important signal energy, not merely signal level
- Three independent Dynamics detectors to capture the full range of transient content: Peak, Fast RMS and Slow RMS
- Two Dynamics modes: Soft Knee and Hard Knee
- LED indicators for Dynamics detector activity and compression ratio
- Accurate multi-segment Dynamics LED meter, displays state of VCA
- Dynamics section takes maximum advantage of modern surface-mount technology for reliability, manufacturability, and compactness
- Multi-colored knobs, GML standard
- Stylish and durable black-anodized aluminum front panel
- Rugged chassis; black powder-coat finish over aluminum
- Reverse-anodized front panel legend, much more permanent than ink or paint processes
- Baked-on epoxy paint silkscreen rear panel legend
- Quality PCB manufacturing, assembly, and chassis construction

OPERATION

The Model 2020 High Resolution Discrete Input Channel offers unprecedented flexibility and sonic accuracy when dealing with a variety of signal sources and conditions. Whether a very simple gain stage or a comprehensive processing path with filter, EQ, and compression is desired, the Model 2020 can accommodate, quickly adapting from one requirement to the next. Although on the surface the Model 2020 seems dauntingly complex, this single-channel unit may be subdivided into several sections for a more straightforward operational analysis.

I. Input Section

The input section of the Model 2020 High Resolution Discrete Input Channel is based on the gain stage of the Model 8300 Transformerless Microphone Preamplifier, though there are some design changes and quite a few additions to expand its capabilities further than is realized in the highly specialized Model 8300 mic preamp.

Three input formats are accommodated on the Model 2020: on the back panel, XLR connectors are provided for microphone and line inputs separately, while the front panel sports a 1/4" unbalanced musical instrument connector.

The microphone input of the Model 2020 is an exact copy of the Model 8300 input circuitry, complete with 48V phantom power and subsequent 2-pole phantom filter. Unlike the Model 8300, the phantom power switch is conveniently located on the front panel and includes an LED indicator to warn the user that phantom power is ON. The Mic input is precision electronically balanced, 1 kΩ nominal input impedance, with tremendous dynamic range and wide bandwidth.

The 20kΩ balanced bridging Line input is the simplest input path to the gain stage and allows the Model 2020's versatility to extend well beyond tracking sessions. Indeed, the inclusion of this input allows the Discrete Input Channel to be used at any stage of the recording process. The Model 2020 thus proves rather desirable in mixing situations, either as a single independent unit or in a bank of linked units *(for further information on this topic, see the Link section of this manual)*.

Rounding out Model 2020 input options, the front panel M/I input extends the sphere of application to the realm of the oft-neglected musical instrument. This high impedance unbalanced input (1MΩ nominal) offers extremely low noise and low distortion, plus a wide dynamic range and ruler-flat extended frequency response to outclass common instrument inputs. Especially useful for recording bass or electric guitar--in addition to an amp, miked and routed through another Model 2020, or straight to tape--this input can also be used for a variety of other unbalanced sources such as electronic keyboards, samplers, etc.

The input source for the Model 2020 is selected on the lower *Routing* switch, located near the lower left corner of the front panel. Only one source may be active through the channel at a time; however, signals may be present at the other inputs since the source select function does not ground unused inputs *(see Specifications page of this manual for separation figures)*. Phantom powering may remain On, if necessary, when switching between input sources without damage to other input devices since the phantom supply does not reach the Line or M/I inputs. It is, however, recommended that the phantom power be turned Off when not in use to preserve power supply efficiency and eliminate possible DC pops when changing input source selection.

An extremely wide range of gain settings (10dB of attenuation through 70dB of gain in accurate 5dB steps) is available for all inputs of the Model 2020. This feature accommodates a wide range of input signals, from extremely "hot" microphone inputs to extremely "low" line or M/I inputs, which are commonly neglected by the vast majority of peripheral audio processing devices. Indeed, the minimal 20dB of gain found in most microphone preamplifiers can be excessive in certain circumstances, and decreases the possibility of optimized gain staging. By the same token, real-world line level signals often require more than the typical 10 dB of gain commonly accorded them. A high quality rotary switch, marked *Gain*, is used to control the gain setting of the input section, using a combination of discrete metal film resistors for the ultimate in accuracy, stability, durability, and sonic integrity.

Incorporated into the input section, the *Phase* switch activates a relay just before the balancing portion of the input section. No signal is present at the front panel *Phase* switch--it is merely a relay control and LED indicator voltage. Engaging this switch reverses the phase of the input signal, akin to swapping pins 2 and 3 on the Mic or Line XLR's. In the case of an M/I input, the *Phase* function will change the absolute polarity of a given input signal.

Integral to the operation of the input section is the balancing stage. This stage provides common-mode rejection and precision balancing for the inputs, while also buffering the input gain stage from all subsequent stages of the Model 2020. As with all sections of the Discrete Input Channel, this stage exhibits extremely low noise and distortion, wide bandwidth and dynamic range, and utilizes precise DC-servo coupling.

The Input Meter provides a valuable addition to the Model 2020 input section. This 5-segment discrete LED display follows the input signal source and displays an accurate indication of signal level after the input stage and high-pass filter. It should be noted that the range and accuracy of this particular meter exceeds many common level indicators. Indeed, with 54dB difference between the maximum indicator (+24dBu) and the minimum indicator (-30dBu), the dynamic range of the meter presents quite a design challenge; however, this meter is rugged and generally accurate to within +/-1dB of the front panel legend. Fast transient response and a decaying LED fadeout help make this meter extremely useful and pleasant to view.

II. Filter

Immediately following the input section of the Model 2020 is an extremely useful and transparent high-pass filter, which has three optional settings: 40Hz roll-off, flat response, or 100Hz roll-off. Designed for maximum clarity and musicality, this active second order Butterworth high-pass filter is implemented with premium-grade film capacitors, precision metal-film resistors, and a pristine GML 9202 discrete opamp. Passband response is maximally flat for both the 40Hz and 100Hz selections, while the Model 2020's ruler-flat frequency response is preserved in the "flat" setting. A second-order high-pass filter, this circuit creates a -12dB per octave roll-off below the corner frequency, an appropriately flexible and powerful function since many engineers use the low-frequency band of a fully parametric equalizer--a Model 8200, for instance--in shelf mode as a high-pass filter of sorts. The presence of this dedicated filter, then, actually enables the user to reserve the low-frequency EQ band of the Model 2020 for other purposes.

III. Routing

A significant portion of the Model 2020's allure is the tremendous flexibility accorded the user in determining the internal signal routing of the EQ and Dynamics sections. This functionality is incorporated in the front panel *Routing* control, a five-position rotary switch manufactured to GML's exacting standards.

Specifically, the *Routing* control allows the user to configure the Model 2020 in one of five topologies. Comprising four of the options, the EQ section may feed the Dynamics section or the Dynamics section may feed the EQ section--in either case, allowance has been made to accommodate an external sidechain input to the Dynamics section via the back panel Sidechain In XLR. Additionally, the Dynamics sidechain may source the output of the EQ, with both sections' audio inputs receiving signal from the input stage. The latter case disables the external sidechain, is labeled "EQ to DYN SC" on the front panel legend, and can be useful in ducking or other frequency-dependent dynamic gain control applications. In all cases, the main Output of the Model 2020 is the direct-coupled DC-servo corrected output of the final stage, whether that stage is the Equalizer section or the Dynamics section. There is, therefore, no dedicated output buffering stage, nor is there a master output level control, unless the Dynamics *Output* control is used to provide this function.

IV. Parametric Equalizer

The EQ section of the Model 2020 High Resolution Discrete Input Channel offers astonishing precision and sonic accuracy when sculpting the response of any source. Its operational characteristics, duplicated from the Model 8200 Parametric Equalizer, have been honed through many years of use in the most critical recording and mixing situations and have proven both reliable and amazingly accommodating.

The basis of the parametric design topology, in general, specifies control over not only gain or attenuation, but also over both frequency and “Q” factor in multiple user-defined bands. In the case of parametric equalization, “Q” is defined as the center frequency of the alteration (whether gain or attenuation) divided by the bandwidth of that alteration. It follows, then, that low values of “Q” affect a wide range of frequencies around the cut or boost, while high values of “Q” specify a narrow slope around the center frequency.

Another important aspect of true parametric equalization, as embodied in the Model 2020 Equalizer section, is the existence of overlapping frequency bands, which provide great precision and flexibility.

Specifically, this EQ provides complete control over a wide frequency range and “Q” setting, along with 15 dB of cut or boost on four individual bands, with the front panel controls for frequency and “Q” mounted concentrically. The addition of the “Q” characteristic empowers the user to maintain precise and musical control over the tonal attributes of the spectrally processed signal.

The availability of up to 15 dB of gain or attenuation is significant in the audio world, since many contemporary equalizers offer merely 12 dB of cut or boost, and usually not over such flexible overlapping multiple bands. Thus, it is possible to achieve almost any particular “sound” that is desired, no matter if the goal is a subtle alteration or an audible coloration effect.

Front panel controls for the Model 2020 Equalizer section include an illuminated in/out pushbutton switch plus four color-coded bands with amplitude and dual-concentric frequency and "Q" potentiometers. The amplitude pots are continuously variable between +15 dB and -15 dB, with highly accurate 0 dB settings. Each band offers a wide array of frequencies to select on the outer knob of the dual-concentric potentiometer, with a good deal of overlap between bands to accommodate almost any combination of cuts and boosts. The Low and High bands offer counter-clockwise detents for shelving curves in addition to the variable "Q" values from 0.4 to 4 found in the other two bands--all on the central knobs of the dual-concentric potentiometers. Frequency markings can be found along the inner, larger ring of numbers, while the outer, smaller numbers encircling the dual-concentric potentiometer denotes "Q" value.

V. Dynamics

Note: *A basic understanding of the fundamental terms and concepts regarding dynamic range devices in general is paramount to the following discussion and is presumed to exist for the user.*

In contrast to most conventional dynamic range devices, the Dynamics section of the Model 2020 is a complex dynamic range controller that incorporates several powerful features to provide unparalleled flexibility and musicality. Indeed, this section may be thought of as two completely different dynamic range controllers in one package: the simple (physically) change of the *Ratio* setting from Soft Knee to Hard Knee style compression affects this complete change in the section. This difference will be further delineated as it becomes necessary and/or appropriate throughout the following discussion.

All input signals, whether in Soft Knee or Hard Knee operation, must first undergo conversion to a logarithmic control signal. Logarithmic control, whether peak or RMS, results in the same audible effect--in terms of sonic coloration--over the entire range of compression, in contrast to many contemporary dynamic range devices, which produce different audible artifacts varying with the amount of compression employed due to a linear control path signal. In the case of sidechain operation (as determined by the *Routing* control), this logarithmic control signal is derived from the sidechain signal instead of the audio input signal itself, as in normal operation.

The logarithmic control signal generated by the log converter passes next to three detectors. These independent detection circuits are optimized to affect different transient aspects of any possible audio signal: the Slow RMS Detector acts on the least transient (program level) signals, the Fast RMS Detector responds to more highly transient signals, and the Peak Detector deals with the steepest transients. This control architecture allows for individual circuit optimization in each style of detector. The nature of utilizing RMS-style control signals more closely follows the natural response of the human ear-brain complex, thus resulting in greater musicality and audible integrity, even in cases of drastic compression.

The *Timing* control affects the actions of the detection circuits in an intuitive manner, wherein interrelated attack and release time constants are varied simultaneously for the Slow and Fast RMS Detectors, while timing release values are determined for the Peak Detector. Interestingly, the release of the Fast RMS Detector corresponds to the attack of the Slow RMS Detector, while the Slow RMS Detector's release time may be varied independently of its associated attack time constant by engaging the *Release Hysteresis* control.

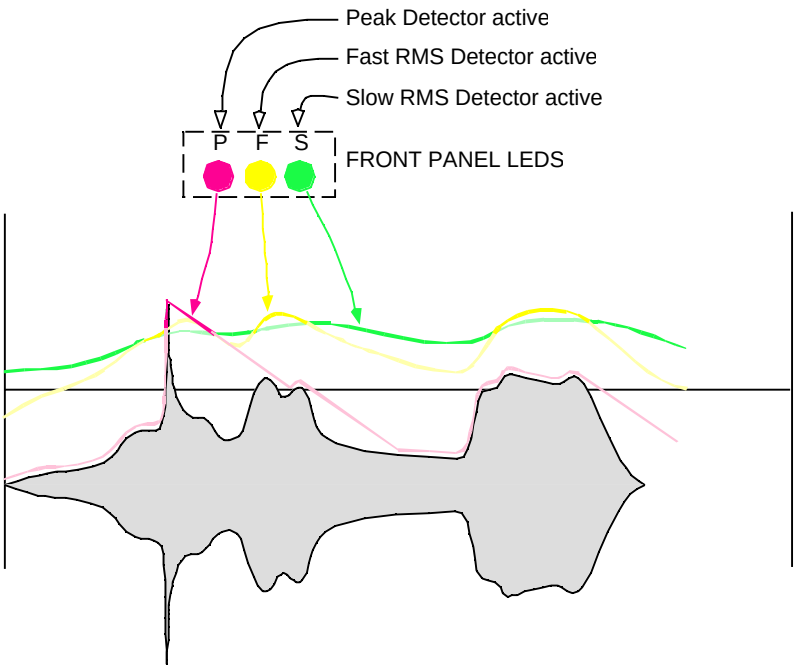

A Detector Compare circuit immediately follows the three detectors of the Dynamics section. The function served by the comparison circuit is to determine how the dynamic range will be affected in subsequent processing blocks. At this stage, the *Crest Factor* controls--both Fast and Peak--determine at what level the dynamic range will be altered for the corresponding control signals from the RMS Detectors. These "weighting factors" allow the comparison circuit to vary the amount of dynamic range alteration applied to the VCA. These controls may actually be seen as a type of predictor to determine the resultant crest factor (signal peak vs. RMS) of the output signal. Higher values of *Crest Factor* (clockwise potentiometer rotation) will result in more transient preservation at the output, all other factors being equal. Interestingly, the crest factor value for the Slow RMS Detector is fixed in the detector comparison circuit.

The most complex and difficult aspect of the operation of the Model 2020 Dynamics section involves the interrelationship of the *Ratio* and *Threshold* controls. It is best to conceptualize these sections in terms of two different units, each with the same control circuitry as described above, but with distinct operational characteristics thereafter.

In terms of straightforward operation, the Soft Knee operation mode is simplest to detail. Operation under this condition emulates the operational principle similar to that found in La2-style compressors, wherein the *Threshold* control behaves as a conventional threshold control to determine the dB threshold value for the dynamic range controller, while the *Ratio* control remains in the "Soft" position. The signal is unaffected until the threshold is surpassed, then compression begins at a moderate ratio and increases automatically, according to a prescribed compression characteristic. Continued signal levels increasing above the threshold result in higher compression ratios such that the further a signal goes beyond the threshold, the more severely compressed it becomes.

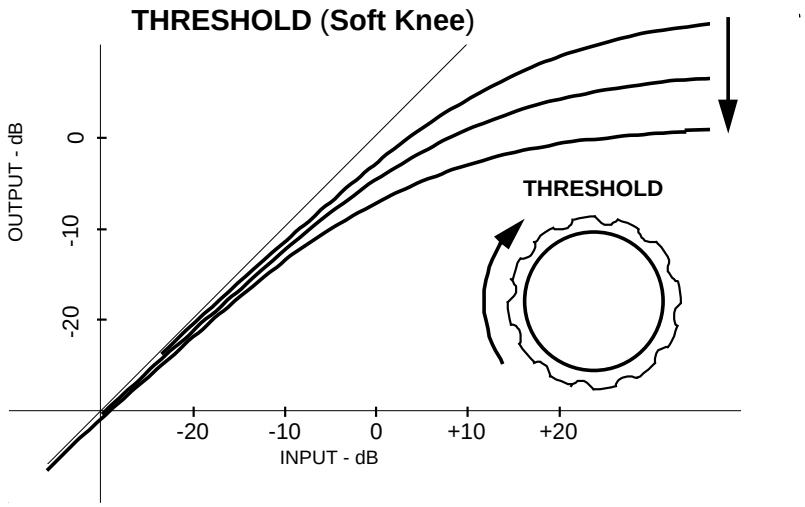

The second mode of operation, Hard Knee, is less straightforward to explain. Under this condition, the *Threshold* control should be thought of as a compression gain control instead of merely a traditional threshold control, as in the 1176-style compressors. In this case, the effective threshold is predetermined, while the *Threshold* control acts as an input gain stage. This results in the possibility of gain before compression in contrast with Soft Knee operation, and allows for greater sonic flexibility over the resultant dynamic range of the output. The *Ratio* control can be varied from very low values to full limiting (infinity to one) in order to attain the most desirable result for any situation.

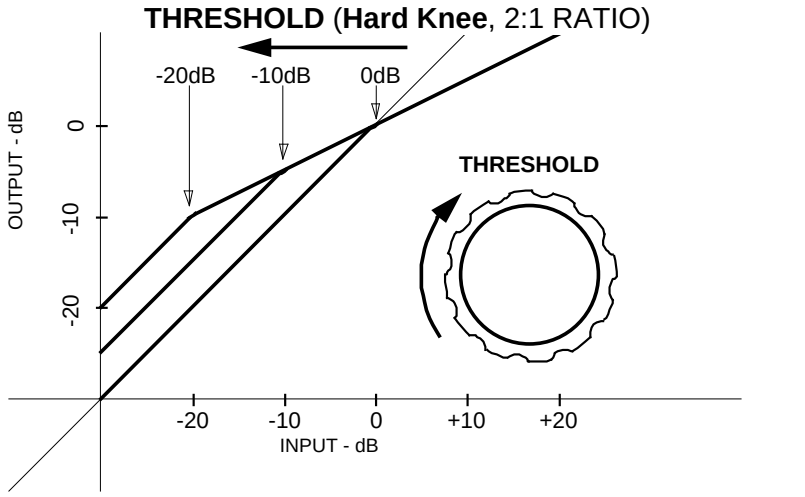

The final element in the control path of the Dynamics section is the *Ratio* control, which has been covered in conjunction with the *Threshold* control previously in this discussion.

The importance of this control to the operation of the unit cannot be overstressed: it provides for two entirely different modes of operation. Soft Knee mode performs as described in the preceding sections with a preset non-user definable variable ratio, while Hard Knee mode allows the user to determine the desirable ratio from 1.5:1 to actual limiting (infinity to one) for a great deal of flexibility.

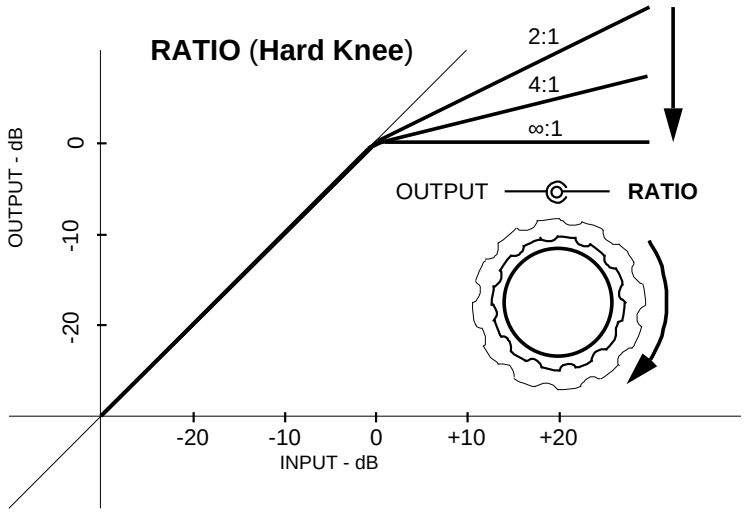

In addition to the aforementioned controls that affect the control signal, one other front panel control remains—the *Output* potentiometer. This control allows for user-determined make-up gain as necessary, with the possibility of available gain and attenuation for maximum flexibility. It should be understood that this control does not affect the dynamic processing functions in any way since it follows the knee generation circuits.

In stark contrast to the intricate complexity of the control path circuitry, the topology of the Model 2020 Dynamics section audio path is quite simple and elegant. The gain element for the feed-forward gain control is a proprietary discrete VCA, which provides excellent low-level resolution, low distortion, extended bandwidth, and extremely low noise. A DC-servo coupled GML 9202 discrete opamp provides output buffering for the Dynamics section.

VI. Clip/OL

In light of the internal routing complexities and the considerable amounts of gain available in both the EQ and Dynamics sections of the Model 2020 High Resolution Discrete Input Channel, the Clip/OL LED indicator provides an essential metering function. This peak detection meter monitors both the EQ and Dynamics outputs to warn of signal overload, regardless of the routing option selected on the *Routing* control. It should be noted that although this warning LED is triggered at 24dBu from either aforementioned output, actual clipping throughout the Model 2020 is not experienced until approximately 26.8dBu, thanks to the extended headroom of GML 9202 discrete opamps.

VII. Control Link

The Link function of the Model 2020 provides a unique means of connecting multiple units together via the RCA connector on the back panel of the unit. The link signal is always present at both connectors, but only affects the normal Dynamics operation when the *Link* switch is engaged. It is paramount to remember that in this mode of operation, signal peaks in *any* channel will affect *all* channels linked with that unit.

Engaging the *Link* switch in the Dynamics section allows the control path to continue converting the incoming signal (regardless of control path input source) as in normal operation, but each Dynamics section's resultant logarithmic control signal will affect the other's operation. Thus, signal peaks in *either* channel will affect *both* channels for linked operation. This feature allows the Dynamics sections of multiple Model 2020's as well as Model 8900's to interact.

Activating the *Link* switch affects the GML 2020 Dynamics section in a much different manner than traditional stereo couple or link switches in most conventional dynamic range devices. The control signals are combined in such a manner as to leave all of the various conversion, detection, and comparison circuits intact and operational in all channels simultaneously. Other dynamic control units have a predilection to merely use the control signal generated by one channel in deference to the other channel’s complete control path, thus obviating the second control path. This inferior method renders the resultant dynamic control insensitive and impervious to the second channel’s unique dynamic content and unresponsive to desired dynamic content differences between channels. It is important to remember that in order to achieve identical dynamic range control characteristics for both channels, the *Threshold*, *Output*, and *Ratio* front panel controls must be adjusted accordingly since these controls still affect the actions of the Knee circuit, which follows the control link signal tap.

MODEL 2020 FRONT PANEL DIAGRAM

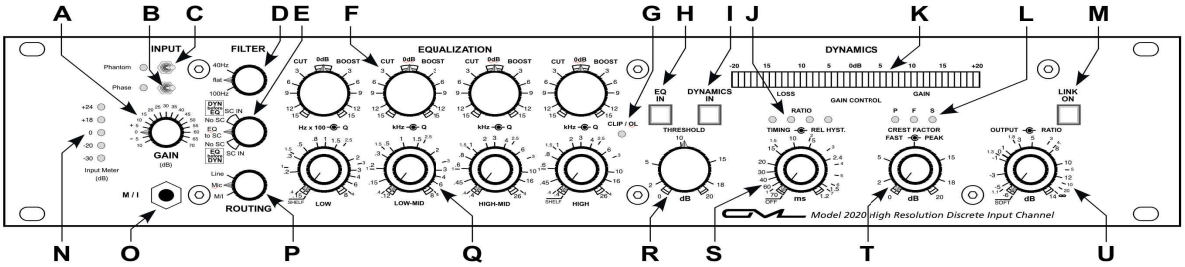

A. The Gain control switch sets the amount of gain or attenuation for the input section in precise 5dB steps from -10dB to +70dB. This is a GML-specified custom precious-metal contact rotary switch.
B. The Phase switch determines the phase/polarity of the selected input signal, while its associated Green LED indicates the state of the Phase relay (Off for in-phase, On for out-of-phase). No audio signal is present at this switch.
C. The Phantom switch allows the application of 48V-phantom power to pins 2 and 3 on the Mic input.
D. The Filter control is a 3-position precision rotary switch used to select the high-pass filter mode of operation: 100Hz roll-off, flat, or 40Hz roll-off.
E. The Routing switch provides unparalleled flexibility in determining the operation of the Model 2020. Routing options available on this precious-metal 5-position rotary switch are discussed in the Operation section of this manual.
F. The Cut/Boost potentiometer controls the amount of gain or attenuation for each EQ band. The potentiometer element is precision-trimmed carbon film, for highest signal integrity and longest life.
G. The Clip/OL LED provides an indication of internal overload for both the EQ and Dynamics sections, regardless of routing option. This red LED is triggered at +24dBu--several dB below actual clipping.
H. The EQ IN switch toggles between the active and bypass modes of operation. No signal is present at the switch; it merely controls a high quality signal relay located near the back of the unit.
I. The Dynamics IN switch toggles between the active (switch in, lamp ON) and bypassed (switch out, lamp OFF) modes of operation. Only a DC relay power signal is present at this switch.
J. The Ratio LED's indicate an approximate compression ratio based on the soft knee characteristic, with compression ratio increasing toward the left.
K. The multi-segment VCA meter gives an accurate reading of the state of the VCA. Not a gain reduction meter, it displays both gain and attenuation based on the control signal applied to the VCA.
L. The Detector LED's indicate which of the three independent detectors is active.
M. The Link switch facilitates the interaction between multiple Dynamics sections of other Model 2020's as well as Model 8900's. No signal is present at this illuminated pushbutton switch.
N. The Input Meter gives visual indication of signal level at the output of the Input section.
O. The M/I input jack furnishes a convenient unbalanced high impedance input to the Model 2020.
P. The Input Source switch, a 3-position rotary switch with precious-metal contacts, determines which of the three inputs are routed to the Input section of the Model 2020.
Q. The Frequency/Q potentiometer determines the center frequency and Q-factor for each band. Frequency ranges differ for the bands to accommodate maximum flexibility, while each concentrically mounted Q control ranges from 0.4 (wide) to 4 (narrow). The inner numerical markings denote center frequency and outer markings delineate Q value. Carbon film is the element of this potentiometer.
R. The Threshold potentiometer behaves as discussed in the Operation section of this manual.
S. The Timing control is a dual-concentric potentiometer, with the Timing actuator on the outer ring and the Release Hysteresis control on the inner knob. The outer numerical markings denote the amount of hysteresis, while the inner markings denote the Timing setting, in milliseconds.
T. The Crest Factor potentiometer is dual-concentric and independently controls the Fast (outer) and Peak (inner) Crest Factor settings, as described in the Operations section of this manual.
U. The Ratio control, mounted concentrically within the Output potentiometer, acts independently to determine both the mode of operation (Soft vs. Hard Knee) and the ratio of the Hard Knee. The Output potentiometer provides a range of -6 to +14 dB gain in the output buffering stage.

MODEL 2020 BACK PANEL DIAGRAM

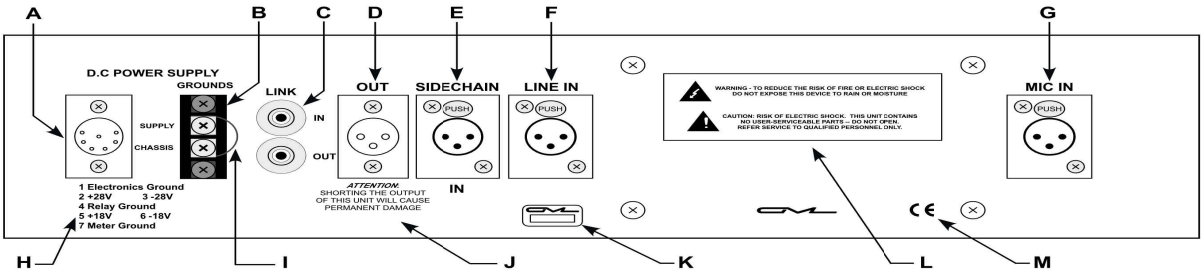

A. The 7-pin D.C. Power Supply Input enables interconnection of the external supply required for the unit to operate (Model 9015). A 6-ft. 7-pin power supply cable ships standard with all new units.

B. The Grounds terminal block gives a common point of continuity to the chassis ground (Chassis) and the electronics ground (Supply). Normally these terminals are tied together with the grounding strap; however, in certain situations it may be advantageous and/or necessary to keep these ground references independent (to eliminate ground loops in some installations, for instance).

C. The Link connectors offer multiple-unit synchronized dynamic control. These high-quality RCA connectors carry the control signal from the Dynamics section of the Model 2020 and allow the highest control signal to dominate, as described in the Control Link section of this manual.

D. The Output connector provides a professional interconnect to external devices. A precious metal, durable XLR connector is provided for the main output, which is D.C. servo corrected, direct-coupled to preserve signal integrity.

E. The Sidechain input provides the flexibility of external Dynamics section control on an XLR. Selected via the front panel *Routing* switch, the Sidechain input is a buffered, balanced interface.

F. The Line input connector features durable precious metal construction. This female XLR feeds the precision electronically balanced input stage via the front panel *Input Source* control.

G. The Mic input XLR feeds the input stage through the front panel Input Source switch. It is a durable, precious metal connector.

H. The D.C. Power Supply Pin-Out Legend reveals the appropriate voltages from the external supply (Model 9015).

I. The Ground Strap normally connects supply ground and chassis ground.

J. The Output Warning reminds users of the inherent danger and permanent damage associated with shorting the output. Normally, this denotes that pin 2 is wired as the hot output pin; however, custom-order units may be wired pin 3 hot.

K. The GML Serial Number Tag contains a permanent imprint of the unit's assigned serial number.

L. The City of Los Angeles, UL, and CE standards require these safety statements, warning the user of possible electric shock-related dangers.

M. The CE (European Electromagnetic Compatibility) marking indicates full compliance with EN 55013:1990 (Electromagnetic Disturbance, Sects. 3.2, 3.5) and EN 55020:1988 (Electromagnetic Compatibility, Sects. 4.3, 5.4, 6.2, 7.0, 8.0).

SPECIFICATIONS*

INPUT

Input Impedance
- Mic: 1 kΩ balanced
- Line: 20 kΩ balanced
- M/I: 1 MΩ unbalanced (tip "hot")

CMRR, 20 Hz to 20 kHz[1]
- Mic: 93.8 dB
- Line: 92.3 dB

CMRR, 100 Hz and 10 kHz
- Mic: 94 dB
- Line: 92 dB

Maximum input before clipping[2]
- Mic/Line: +36.6 dBu
- M/I: +20.1 dBu

THROUGHPUT

INPUT SECTION

MIC INPUT
- -0.1 dB / +0.002 dB, <10 Hz to 40 kHz[3]
- -0.01 dB / +0.002 dB, 15 Hz to 15 kHz
- -3 dB at 280 kHz and <<10 Hz[4]
- <0.002% Harmonic distortion at +20 dBu, 20 Hz to 30 kHz[5]
- <0.005% SMPTE Intermodulation distortion at +10 dBu[6]
- <-120 dBu Equivalent Input Noise[7]

LINE INPUT
- -0.1 dB / +0.002 dB, <10 Hz to 40 kHz
- -0.01 dB / +0.002 dB, 10 Hz to 13 kHz
- -3 dB at 550 kHz and <<10 Hz[8]
- <0.001% Harmonic distortion at +20 dBu, 20 Hz to 30 kHz[9]
- 0.0005% Harmonic distortion at +20 dBu, 20 Hz to 20 kHz, averaged
- <0.0015% SMPTE Intermodulation distortion at +10 dBu[10]
- <-123 dBu Equivalent Input Noise[11]

M/I INPUT
- +0.003 dB / -0.1 dB, <10 Hz to 32 kHz
- +0.003 dB / -0.01 dB, 20 Hz to 10 kHz
- -3 dB at 225 kHz and <<10 Hz
- <0.04% Harmonic distortion at +0 dBu, 20 Hz to 20 kHz, averaged[12]
- <0.17% SMPTE Intermodulation distortion at +10 dBu[13]
- <-117 dBu Equivalent Input Noise[14]

CROSSTALK[15]
- Line to Mic: -110 dB; Mic to Line: -90 dB
- Line to M/I: -122 dB; M/I to Line: -102 dB
- Mic to M/I: -113 dB; M/I to Mic: -106 dB

EQUALIZER SECTION[16]
- -0.1 dB / +0.002 dB, <10 Hz to 36 kHz
- -0.01 dB / +0.002 dB, 12 Hz to 12 kHz
- -3 dB at 250 kHz and <<10 Hz
- 13 dB Noise Figure, EQ In vs. EQ Out[17]
- <0.001% Harmonic distortion at +20 dBu, 20 Hz to 20 kHz, averaged[18]
- <0.0025% Harmonic distortion at +20 dBu, 20 Hz to 30 kHz
- <0.0025% SMPTE Intermodulation distortion at +10 dBu[19]

DYNAMICS SECTION[20]
- -0.1 dB / +0.002 dB, <10 Hz to 26 kHz
- -0.01 dB / +0.002 dB, 14 Hz to 12 kHz
- -3 dB at 170 kHz and <<10 Hz
- 10 dB Noise Figure, DYN In vs. DYN Out[21]
- <0.009% Harmonic distortion at +10 dBu, below threshold, 20 Hz to 20 kHz, averaged[22]
- <0.015% Harmonic distortion at +10 dBu, below threshold, 20 Hz to 30 kHz
- <0.015% SMPTE Intermodulation distortion[23]

OUTPUT

+26.6 dBu clipping
< 3 mV output offset, stabilized by DC servo correction, direct coupled
Normally wired pin 2 "hot"

Specification Notes

* All tests conducted at the GML laboratory using the Audio Precision System Two Cascade Dual Domain (AP S2C), or otherwise as noted. Unless specified differently, all tests include AP S2C residual measurement and were conducted under the following conditions: Rs=40Ω, RL=100kΩ, <10Hz to >500kHz analyzer bandwidth. GML reserves the right to make changes to these specifications as it deems necessary. Individual unit performance may vary due to environmental influences, manufacturing variations, and component tolerances.

[1] CMRR determined by calculating the average across a 200-point logarithmic frequency sweep from 20 Hz to 20 kHz. DUT set to 70 dB gain, +20 dBu CMTST signal from AP S2C.

[2] Clipping as determined by THD+N in excess of 0.1% for Mic and Line inputs, 1.0% for M/I input. The stated value for the Mic and Line input was calculated by adding 10 dBu to the measured clipping point at the 0dB gain setting of the DUT, to accommodate direct inspection (the AP S2C Generator output cannot exceed +30 dBu). M/I clipping, as stated, is independent of gain setting since the M/I input buffer clips before the gain stage(s).

[3] All bandwidth tests conducted at +0.0 dBu output level. Measurements are typical across the gain range of the DUT. Default input gain settings: +45dB, Mic; 0dB, Line and M/I.

[4] Direct -3 dB measurement using HP 3314A function generator (Rs=50Ω) and Tektronix 2445 150MHz analog oscilloscope (Rin=1MΩ, 15pF), at 0dBu unbalanced. The low-frequency -3 dB corner of the Model 2020 exceeds the LF response of the HP 3314A, which has a -3 dB corner at 7 Hz.

[5] Includes AP S2C residual THD+N of 0.0007% and Analyzer 30 kHz LPF. Test conducted with -25 dBu swept sine, Mic input, 45dB gain setting.

[6] Includes AP System One residual IMD of 0.001%. Test conducted with -35 dBu SMPTE/DIN 4:1 signal, 7 kHz and 60 Hz. DUT set for 45dB gain, Mic input.

[7] Noise measurement with Rs=150Ω balanced termination. Specification includes 2nd order LPF at 30 kHz. Theoretical source resistance noise for this bandwidth is -128.7 dBu. Mic input, 70dB gain setting.

[8] Direct -3 dB measurement using HP 3314A function generator (Rs=50Ω) and Tektronix 2445 150MHz analog oscilloscope (Rin=1MΩ, 15pF), at 0dBu unbalanced. The low-frequency -3 dB corner of the Model 2020 exceeds the LF response of the HP 3314A, which has a -3 dB corner at 7 Hz.

[9] Includes AP S2C residual THD+N of 0.0007% and Analyzer 30 kHz LPF. Test conducted with +20 dBu swept sine, Line input, 0dB gain setting.

[10] Includes AP System One residual IMD of 0.001%. Test conducted with +10 dBu SMPTE/DIN 4:1 signal, 7 kHz and 60 Hz. DUT set for 0dB gain, Line input.

[11] Noise measurement with Rs=150Ω balanced termination. Specification includes 2nd order LPF at 30 kHz. Theoretical source resistance noise for this bandwidth is -128.7 dBu. Line input, 70dB gain setting.

[12] Includes AP S2C residual THD+N of 0.0007% and Analyzer 30 kHz LPF. Test conducted with +0 dBu swept sine, M/I input, 0dB gain setting.

[13] Includes AP System One residual IMD of 0.001%. Test conducted with +10 dBu SMPTE/DIN 4:1 signal, 7 kHz and 60 Hz. DUT set for 0dB gain, M/I input.

[14] Noise measurement with Rs=150Ω unbalanced termination. Specification includes 2nd order LPF at 30 kHz. Theoretical source resistance noise for this bandwidth is -128.7 dBu. M/I input, 70dB gain setting.

[15] Includes AP S2C residual crosstalk of -140 dB. Test conducted with +30 dBu 1.0 kHz balanced to noted input, DUT set for 20dB gain, measured input source selected; except M/I signal measurements, which used +20 dBu 1.0 kHz unbalanced signal.

[16] All EQ Section measurements utilize Line input, 0 dB gain, EQ In, no cut/boost, minimum frequency and Q settings.

[17] Includes AP S2C Analyzer 30 kHz LPF. <-83 dBu versus -96 dBu noise, Line input, Rs=150Ω, 0 dB gain. It is important to note that hardware limitations of the AP S2C--including low-level reading resolution and residual noise--prevent a more accurate absolute-noise measurement for the low-gain settings of the Model 2020.

[18] THD+N averaged from 20 Hz to 20 kHz, including 30 kHz LPF. Line input, 0 dB gain, EQ In, no cut/boost, minimum frequency and Q settings, +20 dBu input.

[19] Includes AP System One residual IMD of 0.001%. Test conducted with +10 dBu SMPTE/DIN 4:1 signal, 7 kHz and 60 Hz. DUT set for 0dB gain, Line input, EQ In, no cut/boost, minimum frequency and Q settings.

[20] All Dynamics Section measurements utilize Line input, 0 dB gain, DYN In, 0 dB Threshold control, 0 dB Output control, no net gain change.

[21] Includes AP S2C Analyzer 30 kHz LPF. <-86 dBu versus -96 dBu noise, Line input, Rs=150Ω, 0 dB gain. It is important to note that hardware limitations of the AP S2C--including low-level reading resolution and residual noise--prevent a more accurate absolute-noise measurement for the low-gain settings of the Model 2020.

[22] THD+N averaged from 20 Hz to 20 kHz, including 30 kHz LPF, +10 dBu. Line input, 0 dB gain, DYN In, 0 dB Threshold control, 0 dB Output control, no net gain change, Sidechain engaged.

[23] Includes AP System One residual IMD of 0.001%. Test conducted with +10 dBu SMPTE/DIN 4:1 signal, 7 kHz and 60 Hz. DUT set for 0dB gain, Line input, DYN In, 0 dB Threshold control, 0 dB Output control, no net gain change, Sidechain engaged.

FORM FACTOR

One channel, multi-input, gain, filter, parametric equalizer, and dynamic range controller

Input Section

3 inputs: Mic, Line, M/I (Tip = Signal, Sleeve = Ground)
Input Source control: Mic, Line, M/I
Gain control: -10dB to +70dB, 5dB steps
Input meter, 5 LED's: -30dB, -20dB, 0dB (green), +18dB (yellow), +24dB (red)
Phase switch, toggle: In-phase (LED off), Phase reverse (LED on)
Phantom switch, toggle: Phantom on (LED on), Phantom off (LED off)

Filter -- Second-order Butterworth active high-pass filter; 100Hz, flat, 40Hz

Routing control (for further delineation and graphical representation, refer to the block diagrams in this manual)

1. EQ before DYN, SC IN
2. EQ before DYN, No SC
3. EQ to SC
4. DYN before EQ, No SC
5. DYN before EQ, SC IN

EQ section

EQ IN switch, illuminated pushbutton: EQ in (LED on, switch in), EQ out (LED off, switch out)
4 bands, fully parametric, continuously variable

1. 15 Hz – 800 Hz, Q of 0.4 – 4.0 or shelving, 15 dB boost/cut
2. 120 Hz – 8 kHz, Q of 0.4 – 4.0, 15 dB boost/cut
3. 400 Hz – 26 kHz, Q of 0.4 – 4.0, 15 dB boost/cut
4. 400 Hz – 26 kHz, Q of 0.4 – 4.0 or shelving, 15 dB boost/cut

Dynamics section

DYNAMICS IN switch, illuminated pushbutton: Dynamics in (LED on, switch in), Dynamics out (LED off, switch out)
Threshold control: 0dB to 20dB
Timing: Timing control, ring: 1.2ms to 70ms
Release Hysteresis control, knob: 1ms to 7ms, OFF detent
Crest Factor: Fast Crest Factor control, ring: 0dB to 20dB
Peak Crest Factor control, knob: 0dB to 20dB
Output: Output control, ring: -6dB to +14dB
Ratio control, knob: 1.1:1 to ∞:1, SOFT detent
LINK ON switch, illuminated pushbutton: in (LED on), out (LED off)

Main Output: direct-coupled, DC-servo corrected, unbalanced (pin2=Sig, pins1,3=Gnd)

Clip/OL -- Red LED, +24dBu indication: monitors EQ and DYN outs

POWER

Requires GML Model 9015 external power supply; +/-28 VDC, +/-18 VDC
Additional board-level regulation: +/-15 VDC, +12 VDC
Separate Ground and Chassis connections at rear

MECHANICAL

19" W x 3.5" H x 8.5" D rack mount chassis, black anodized aluminum, silver legend
Weight: 11 lbs., approximate; shipping weight may vary

DESIGN

On the surface it is not eminently evident just how much "new" design is represented in the Model 2020 High Resolution Discrete Input Channel. Indeed, the EQ and Dynamics sections have been barely modified from the reference-standard Model 8200 Parametric Equalizer and Model 8900 Dynamic Gain Control and even the Model 8300 Transformerless Microphone Preamplifier is largely copied herein. The design innovation, however, of the Model 2020 lies, at least partially, in the confluence of these diverse parts into a cohesive and extremely powerful whole.

The most notable and noticeable additions to the aforementioned GML legacy products embodied in the Model 2020 are in the Input section. The innovative inclusion of multiple inputs, new to the GML line, certainly adds to the allure of the Model 2020, while the completely original M/I input circuitry represents a welcome addition to the GML repertoire. An extremely wide range of gain settings for all three input types has rarely, if ever, been implemented--this feature alone lends much vitality to the unit.

Metering has often been an area of design where changes have often been recommended, especially for the mic preamp. The Model 2020 Input meter meets these expressed needs elegantly over a wide range of signal levels. This entirely new circuit is implemented using a building-block approach instead of the more common all-in-one metering IC solution, which tends to be quite limited, especially in terms of transient response, variable segment fade time, and especially dynamic range.

The routing functions of the Model 2020--both the *Input Source* and *Routing* switches--complement the various processing blocks, providing a great deal of flexibility. The front panel capacity to switch amongst the three inputs also augments the agility inherent in the Model 2020. Particularly evident as an advantage over the use of even the GML 8x00 series separates, the ability to quickly change the relative position of the EQ and Dynamics sections adds a great deal of versatility to the overall feature set.

Though the front panel EQ controls seem very intuitive to the initiated and experienced audio engineer, the circuit design behind these controls is anything but simple and straightforward. The Model 2020 EQ section features exemplary buffering circuits in addition to the actual equalization circuits. It is important to keep in mind that all circuits in any device necessarily alter the sonic character of any complex signal, though these colorations have been meticulously minimized in the design of the Model 2020. Many contemporary equalizer designs are not sensitive or wary of this aspect of audio electronics and thus require some amount of alteration to compensate for this additional spectral signature induced by the unit itself.

It should be intuitive that since the Model 2020 Dynamics section front panel functions are difficult to understand, so the unique circuit design behind these controls must be incredibly complex. From the exemplary buffering circuits and proprietary discrete VCA to the heart of the unit--the control circuitry--the Dynamics section maintains the power and flexibility that is expected of GML units.

Great care has also been taken--as in all aspects of the GML Model 2020--to select the highest quality components, from the potentiometers on the front panel to the smallest passive elements. This attention to detail partially elucidates the quality found in the High Resolution Discrete Input Channel. These component choices, coupled with superior design and a proclivity towards innovation, combine to make the Model 2020 the most powerful, flexible, and transparent single channel processor ever designed.

Another feature that distinguishes the Model 2020 from the myriad of other commercially available single channel processors is its inherent dynamic range. In the EQ section, this extended dynamic range allows for the addition of 15 dB of gain in multiple frequency bands simultaneously without even a hint of distortion or loss of detail and authority. Furthermore, in the Dynamics section this range inherently offers a great deal of added flexibility within the audio path, allowing the Model 2020 the utmost freedom, precision, and transparency in dynamically controlling gain. This amazing power is due in large part to the GML propensity to design all audio circuits from discrete components. Discrete designs, when executed properly, help to preserve not only sonic integrity and musicality, but also to maintain the widest dynamic range through the entire signal path, thus eliminating many sonic compromises and limitations. Not only do these discrete structures--and the GML 9202 discrete opamp in particular--sound better than their integrated counterparts, they also offer the ability to design for higher signal levels internally, while also optimizing dynamic range by providing a low noise floor.

An additional benefit of the discrete circuit topology used in the Model 2020 is increased bandwidth. Not only does this significant extension--of both high and low frequencies--provide for more detail and realism; it also ensures a greater degree of linearity in the traditional audio spectrum (20 Hz to 20 kHz) by locating bandwidth poles superceding these commonly-accepted limits. Indeed, the frequency response of the Model 2020 is well within +/- 0.1 dB from below 10 Hz to well above 40 kHz, while the +/- 3.0 dB response exceeds the ability of most audio test apparatus to measure.

Interestingly, the Model 2020's design affords it distinct advantages over signal chains comprised of entirely separate units. Not only is the flexibility of the 2020's routing--obviating the need for tangles of cables --lost in separates, but also the small 2U frame of the Model 2020 greatly outpaces the space requirements of such separates. Only a single GML external power supply is required for the Model 2020, further saving space and knots of power cables. Most importantly, by locating all of the processing blocks in one chassis, the Model 2020 eliminates the need for extraneous buffering and balancing stages between each processing block. These superfluous stages necessarily add noise and distortion in even the best separates and worse, may cause interface compatibility problems.

POWER SUPPLY

Integral to the superb quality of all GML products is the external power supply. No piece of electronic equipment can operate as designed without an adequate power supply; however, most contemporary processors do not feature a supply which can provide clean, quiet power without unduly heating the device. The Model 9015 excels in this respect, providing clean, quiet power for the many complex and sensitive circuits of the Model 2020, while remaining cool and efficient. Internal supply topologies are generally limited by board real-estate and thermal considerations and thus are almost always exclusively of one or another of the switching topologies, which results in more mains-induced noise and less ability to react to highly transient signal content or extreme circuit actions. The internal power distribution scheme employed by the Model 2020 is also responsible--in concert with the external supply itself--for preserving the highest audio quality throughout the many circuits of the High Resolution Discrete Input Channel.

A NOTE REGARDING NOISE

It is important to keep in mind that the noise performance of the Model 2020 varies with operational settings. An increase in noise is to be expected when switching from the 'EQ Out' state to the 'EQ In' state. The reason for this characteristic is inherent to our proprietary design, which places the control before all of the processing bands. This gives our parametric equalizers two distinct advantages: first, potentiometer noise is attenuated; second, the likelihood of internal overload is extremely remote, if not impossible, even with 15 dB of gain available in each band. Interestingly, the most dangerous condition for internal overload is experienced when using just a bit of EQ with very high-level input signals. Similarly, the noise floor of the Model 2020 should be expected to increase proportionally with gain and frequency in the Dynamics section when that section is in-circuit. The big difference between GML units and non-GML units comes not only in our design topology, but also in our component choices. In fact, our topology is not really feasible with IC op-amps--they're always noisier than discretes--and only works with our quiet, transparent discrete op-amps, which can cleanly handle output signals up to +27.5dBu. One should expect the noise floor to increase proportionally with gain, frequency, and "Q", in accordance with the laws of physics.

TROUBLESHOOTING

Note: *This unit is a highly sensitive device that includes many complex circuits.*
THIS UNIT CONTAINS NO USER-SERVICEABLE PARTS.
Warning: Risk of electric shock if top cover is removed.

In the event of unit operational failure, contact the GML Repair Department. Refer to the "Contacts" page of this manual, or for more current contact information, check our web site. Please be prepared to describe in detail the exact problem that the unit is experiencing, including: failure conditions, system signal flow, exact failure manifestation, events and actions leading to the failure, etc. Also, be able to quickly provide contact information and the unit's GML Serial Number.

It is highly recommended that customers do not attempt to troubleshoot their own units or have them repaired at unauthorized repair centers. Opening the case of the unit will break several manufacturing seals and void the GML warranty--these security measures cannot be readily detected nor easily thwarted, and should be respected wholeheartedly. These measures also act to protect the intellectual property of GML so that we may continue to design high-end professional audio peripherals.

NOTICES

The following list of notices will help ensure the longevity of the Model 2020.

- Allow 15-20 minutes for DC servo settling after power-on. Operating the unit before the servos settle may cause clicks and pops that can potentially damage speakers and/or other devices.
- This unit contains ESD-sensitive components; handle with care.
- Provide adequate ventilation for the Model 2020 and its power supply. Inordinate heat buildup can cause premature aging of the components in the unit and may lead to operational failures.
- The availability of extraordinary amounts of gain throughout the Model 2020 necessitates careful attention to the meters to avoid internal overload and subsequent sonic degradation.
- To avoid potentially large DC pops, switch inputs or Phantom power at minimal *Gain* settings.
- The rear panel RCA connectors are provided to facilitate the GML Link function and should not be used in conjunction with any other signal or device. Permanent damage to the Model 2020 and/or other devices may result.
- Front panel legend markings reflect approximate values, which may vary from unit to unit due to component tolerances, environmental conditions, normal aging, etc. Please do not contact the GML Repair Department with requests to align or "match" specific controls to front panel markings. Frequency, gain, timing, and Q accuracy are not specified nor guaranteed for the Model 2020.

CONTACTS

General Information:

GML, LLC.
P.O. Box 1366
Franklin, TN 37065
615.790.1016 (ph)
615.794.4802 (fax)
internet:: www.massenburg.com

Repairs:

GML, LLC.
Attn: Repair Department
Franklin, TN 37064
615.790.1016 (ph)
615.794.4802 (fax)

Engineering:

GML, LLC.
Attn: Jeffrey Warren, Chief Engineer
Franklin, TN
615.790.1016 (ph)
615.794.4802 (fax)
email: jeffrey_d_warren@yahoo.com

Pricing/Ordering:

GML USA Sales Office:
TransAmerica Audio Group
4760 Dewey Dr.
Las Vegas, NV 89118
702.365.5155 (ph)
702.365.5145 (fax)
email: sales@transaudiogroup.com

OR
Contact your local dealer--visit our online dealer locator

Technical Information:

GML, LLC.
Franklin, TN
615.790.1016 (ph)
615.794.4802 (fax)
internet: www.massenburg.com

THIS PAGE IS ONLY A REFERENCE AT THIS TIME. A FINAL REVISION CONTAINING ALL PERTINENT INFORMATION WILL BE INCLUDED IN FUTURE RELEASES OF THIS DOCUMENT.

Credits
Concept: George Massenburg and Jeffrey Warren
Written by: Jeffrey Warren
Diagrams: Jeffrey Warren
Edited by: Jeffrey Warren and George Massenburg
Additional editing: Jenny Rosato, Frank Wire, EveAnna Manley
Technical assistance: Frank Wire, Adrian Nastase, Alan Meyer

ADDITIONAL GML PERIPHERALS

Model 8200 Parametric Equalizer, Series II

Model 8300 Transformerless Microphone Preamplifier

Model 8355 Power Supply

Model 8900 Dynamic Gain Control, Series III

Model 9015 Power Supply

Model 9500 Two Channel 5-Band Parametric Mastering Equalizer

HRT 9100 Mixer

HRT 9145 Multi-Output Power Supply

Model 9550 Two Channel Digital Noise Filter

Model 9560 Digital Noise Filter w/ Macintosh Controller

For ordering information, contact:

GML USA Sales Office:
TransAmerica Audio Group
4760 Dewey Dr.
Las Vegas, NV 89118
702.365.5155 (ph)
702.365.5145 (fax)
email: sales@transaudiogroup.com

OR

Contact your local dealer--visit our online dealer locator at www.massenburg.com

MODEL 2020 HIGH RESOLUTION DISCRETE INPUT CHANNEL

BLOCK DIAGRAM
All Routing Options

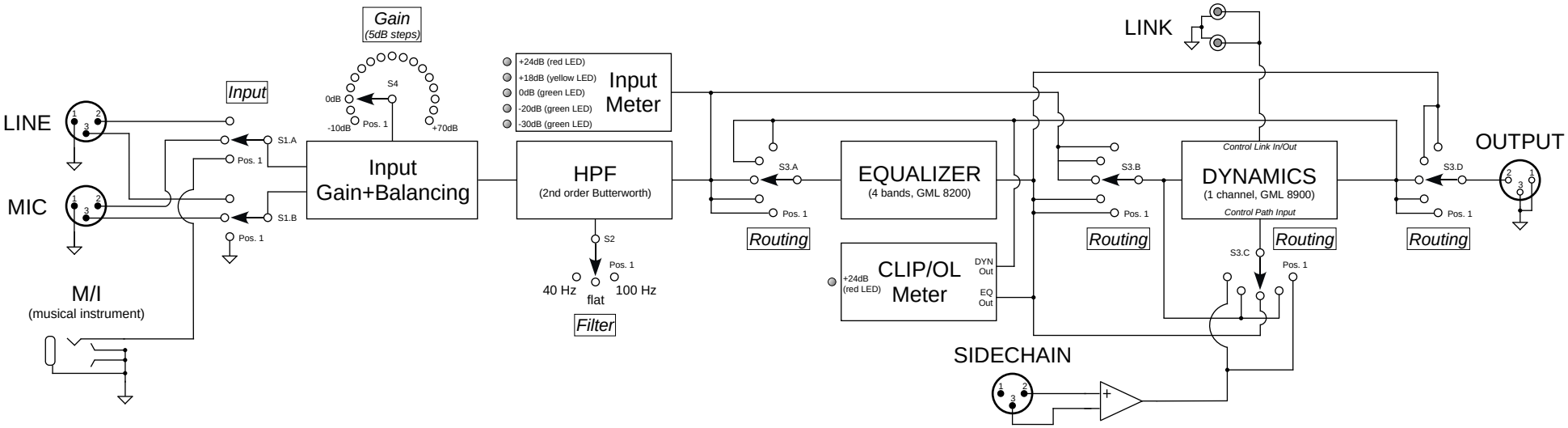

MODEL 2020 HIGH RESOLUTION DISCRETE INPUT CHANNEL

BLOCK DIAGRAM
Routing Option: EQ to SC

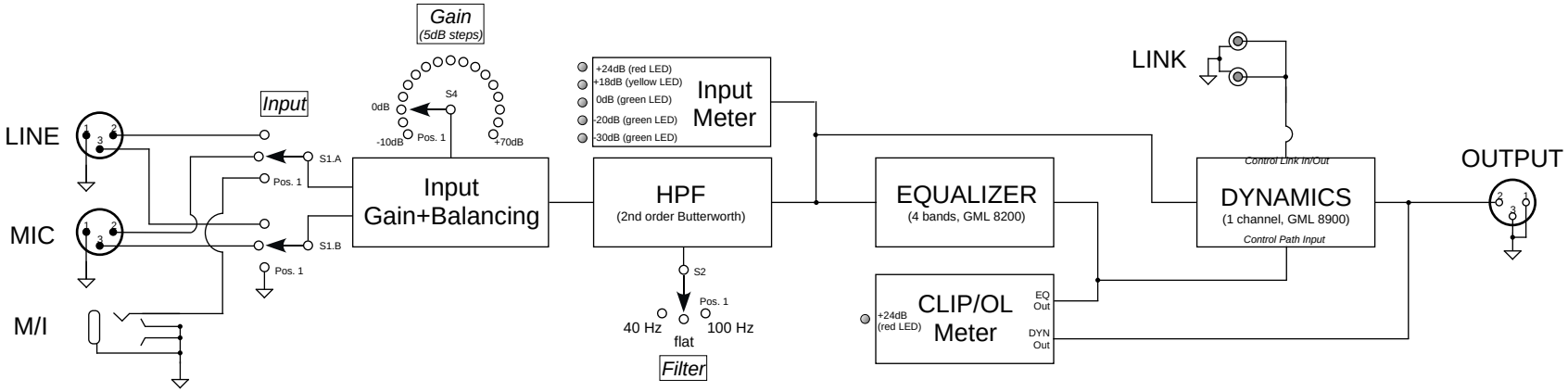

MODEL 2020 HIGH RESOLUTION DISCRETE INPUT CHANNEL

BLOCK DIAGRAM

Routing Option: EQ before DYN

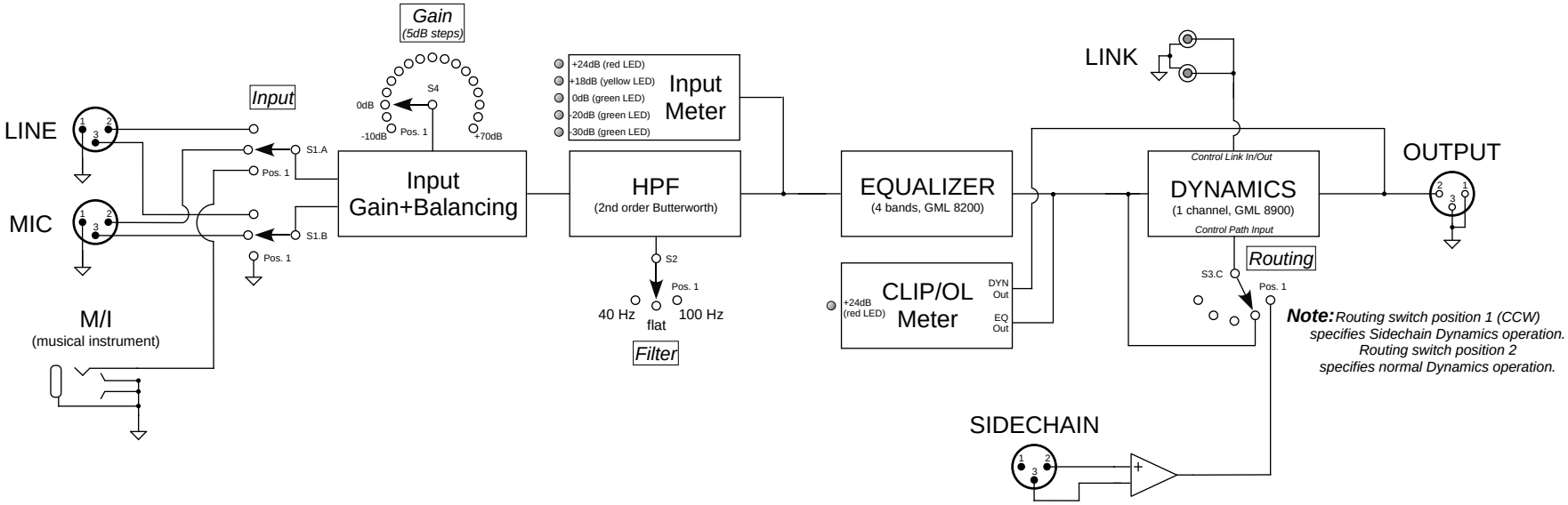

MODEL 2020 HIGH RESOLUTION DISCRETE INPUT CHANNEL

BLOCK DIAGRAM

Routing Option: DYN before EQ

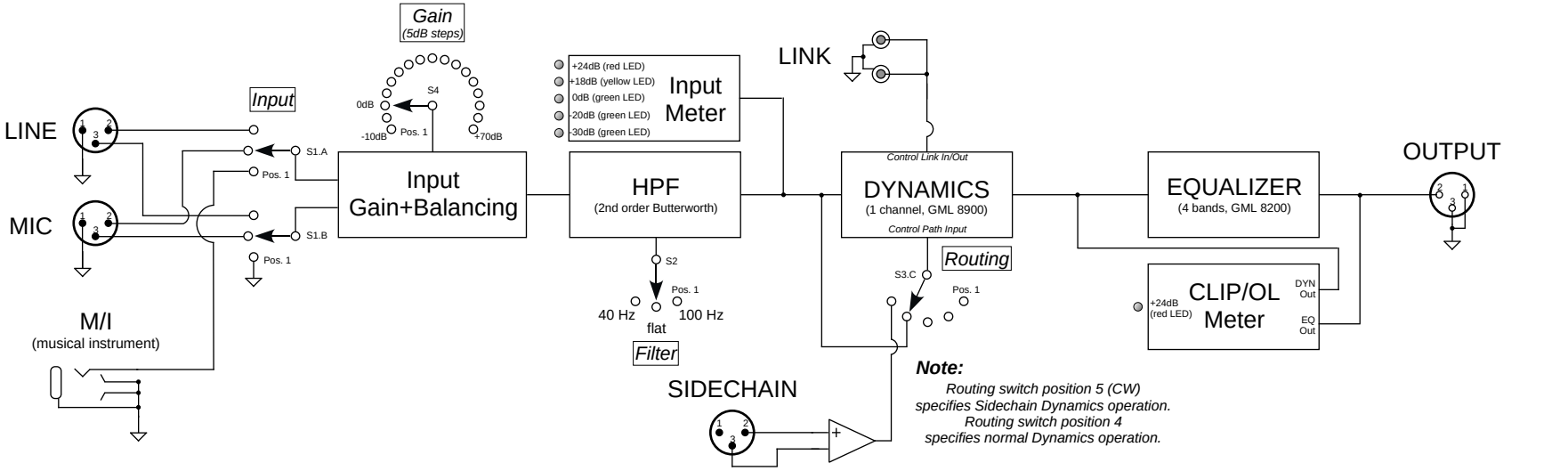

P/N 202-RS-001

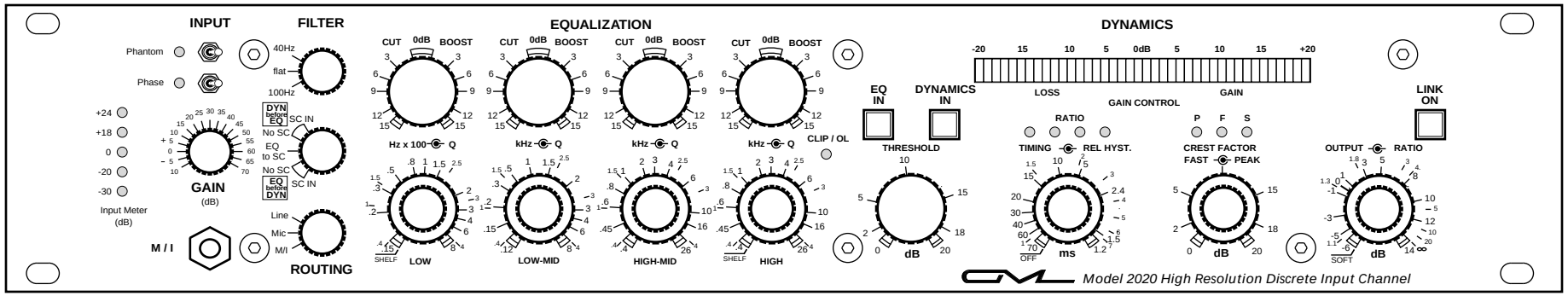

ARTIST ______________________ PROJECT ______________________ DATE ____________

ENGINEER ______________________ ASSISTANT(S) ______________________

INSTRUMENT ______________________ TRACK ____________ NOTES ______________________

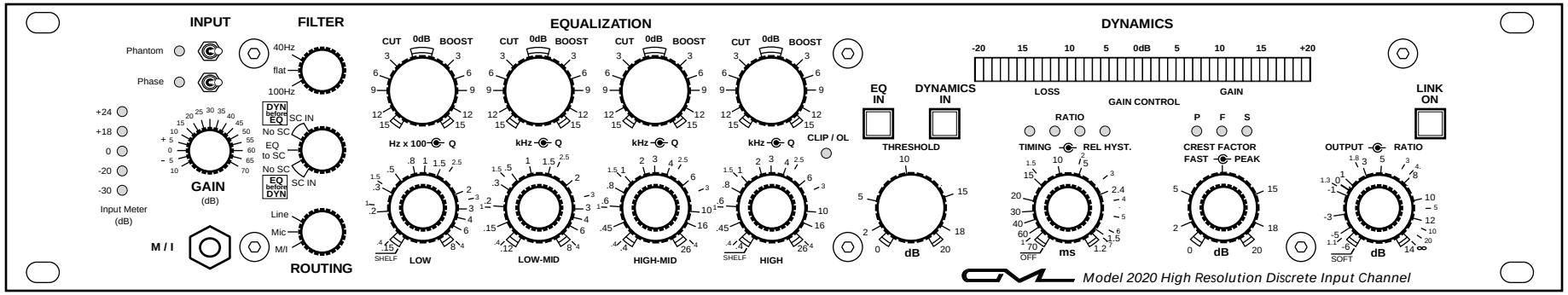

ARTIST ______________________ PROJECT ______________________ DATE ____________

ENGINEER ______________________ ASSISTANT(S) ______________________

INSTRUMENT ______________________ TRACK ____________ NOTES ______________________

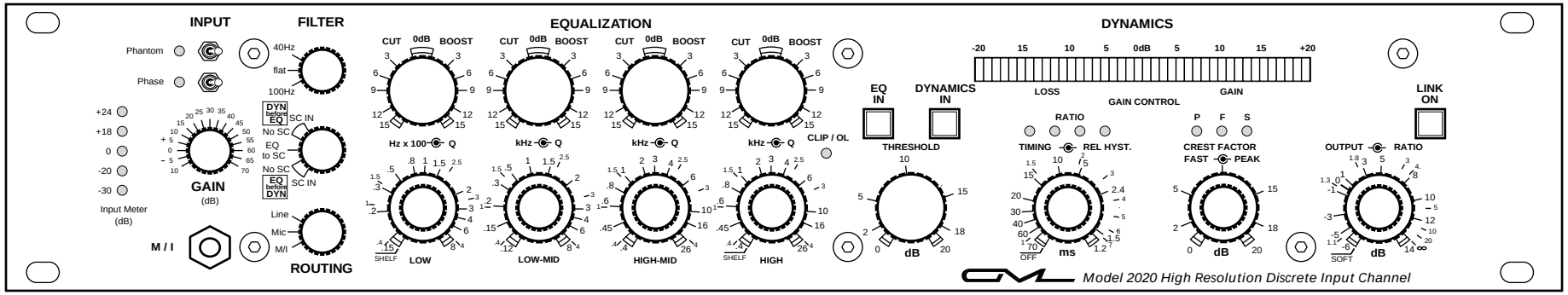

ARTIST ______________________ PROJECT ______________________ DATE ____________

ENGINEER ______________________ ASSISTANT(S) ______________________

INSTRUMENT ______________________ TRACK ____________ NOTES ______________________

10/16/01 JDW